NH1.0型连接器承认书图面

名　　称	材　　料	数量	图　　号	附　　注
基座 Housing	PA9T(UL94V-0)	1	LHE\GC-13	Beige(米黄色)
针 Wafer	磷青铜镀锡 Phosphor Bronze Tin	N		
焊片 Solder pad	磷青铜镀锡 Phosphor Bronze Tin	2		

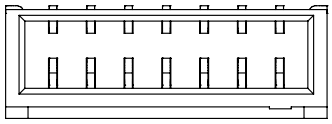

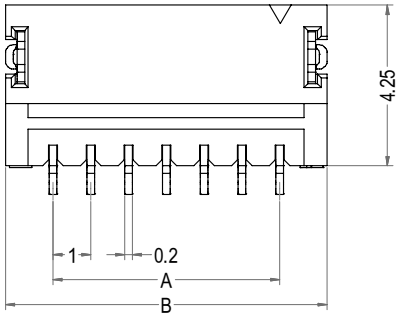

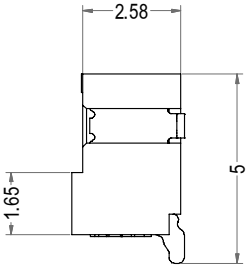

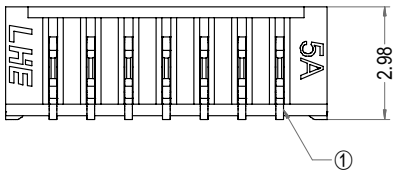

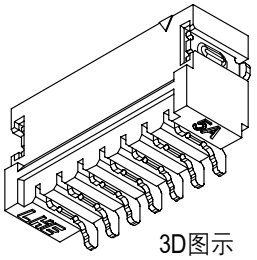

Poles	Part No.	Description	DIM=A	DIM=B
2	A1002-SRB02	NHB1.0-2AWB	1.00	3.50
3	A1002-SRB03	NHB1.0-3AWB	2.00	4.50
4	A1002-SRB04	NHB1.0-4AWB	3.00	5.50
5	A1002-SRB05	NHB1.0-5AWB	4.00	6.50
6	A1002-SRB06	NHB1.0-6AWB	5.00	7.50
7	A1002-SRB07	NHB1.0-7AWB	6.00	8.50
8	A1002-SRB08	NHB1.0-8AWB	7.00	9.50
9	A1002-SRB09	NHB1.0-9AWB	8.00	10.50
10	A1002-SRB10	NHB1.0-10AWB	9.00	11.50
11	A1002-SRB11	NHB1.0-11AWB	10.00	12.50
12	A1002-SRB12	NHB1.0-12AWB	11.00	13.50
13	A1002-SRB13	NHB1.0-13AWB	12.00	14.50
14	A1002-SRB14	NHB1.0-14AWB	13.00	15.50
15	A1002-SRB15	NHB1.0-15AWB	14.00	16.50
16	A1002-SRB16	NHB1.0-16AWB	15.00	17.50
17	A1002-SRB17	NHB1.0-17AWB	16.00	18.50
18	A1002-SRB18	NHB1.0-18AWB	17.00	19.50
19	A1002-SRB19	NHB1.0-19AWB	18.00	20.50
20	A1002-SRB20	NHB1.0-20AWB	19.00	21.50

LHE® 浙江联和电子有限公司			
品名	NHB1.0-AWB	比例	5 : 1
料号	A1002-SRB	未注公差(mm)	
图号	LHE\GC-13	>0~3	±0.12
材料	/	>3~18	±0.15
制图	王天 2024-05-03	>18~50	±0.3
审核	天琴 2024-05-03	>50~120	±0.5
批准	季育文 2024-05-03	X°	±3°
视角		X.X°	±0.5°